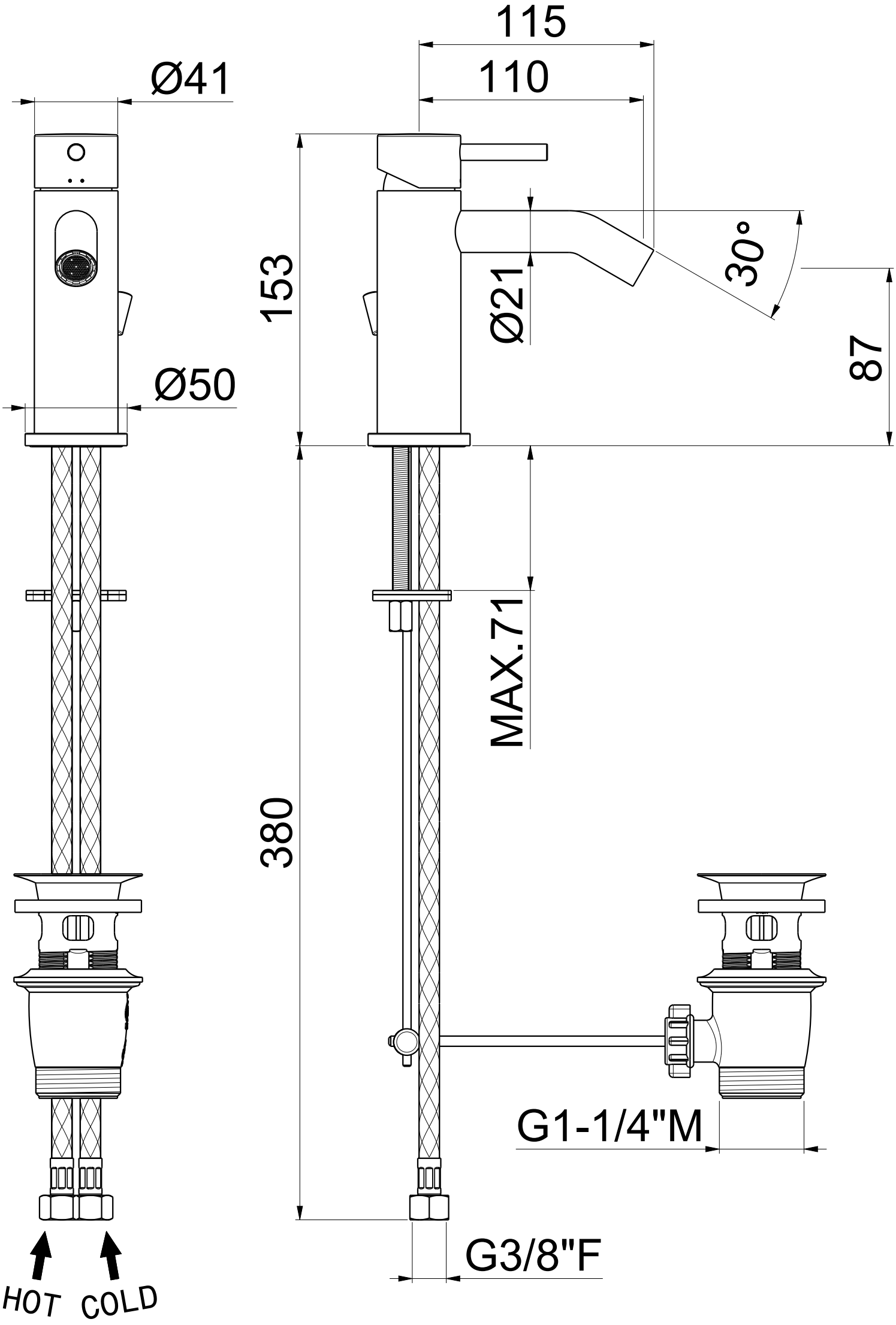
115
110
Ø41
Ø50
153
Ø21
30°
87
MAX.71
380
G1-1/4"M
G3/8"F
HOT
COLD